Duraklick

A brand of SOLTOP Energie GmbH

soltop energie

Mounting system South Eco 10° / 15°/ 20° GE 10° / 15°

Assembly instruction

www.soltop-energie.eu

Welcome!

We are delighted that you have chosen the Duraklick-ECO mounting system. This guide explains the professional installation of the mounting system. If you have questions or suggestions, we will be happy to hear from you.

Your team
SOLTOP

General notes regarding Duraklick ECO / GE

The Duraklick ECO & GE mounting system is particularly designed with economy in mind. Wherever possible, long rails should be optimally employed and the module spacing adjusted accordingly, thereby eliminating the need for profile connectors.

The ECO & GE mounting system consists of the following components:

Direction

The direction is always indicated based on the view shown below.

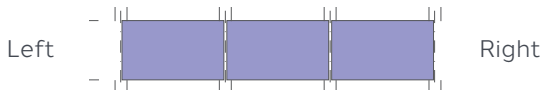

For assembly you need:

- Cordless screwdriver
- Allen key 6 mm for the middle and end clamps
- 8 mm socket attachment for the self-tapping screws
- Measuring tape and tape measure
- Plastic hammer
- Gloves

Compliance with regulatory and safety standards

During installation of the assembly system, it is necessary to ensure compliancewith safety regulations and precautions applicable in the respective country. In Germany these are:

Electrical installation::

- DIN VDE 0100-712 (IEC 60364-7-712) Low-voltage installations - Part 7-712: Requirements for premises, rooms and special installations - Solar photovoltaic (PV) power supply systems
- DIN VDE 0126 Solar systems for private use
- DIN EN 62305 Lightning protection
- VDEW guideline (2001)
- VDI 6012, Sheet 2, Decentralized energy systems in buildings - Photovoltaics
- TAB Technical connection conditions of the energy supply companies

Accident prevention regulations::

- BGV A1 Principles of prevention
- BGV A3 Electrical installations and operating equipment
- BGV C22 Construction work
- BetrSichV, supplementary “Instructions for handling ladders and steps” (BGI 694)

Other:

- VDS (Association of Property Insurers) guidelines
- DIN EN 1991-1-4 Wind loads
- DIN EN 1991-1-3 Snow loads
- DIN 1052 Design, calculation and dimensioning of timber structures - General design rules and design rules for building construction
- Current local provisions and regulations must be observed.

Photograph roof damage!

Before installation, check whether there is damage of any kind, in particular water beading or damage to the roof cladding.

These should be documented with a digital camera to avoid later claims for compensation.

Roof preparation

The roof surface to be covered must be free of impurities, e.g. sharp stones, moss, leaves, dirt, etc., to ensure that the floor rails can be laid flat. Clean the roof!

Caution!

Personal danger!
Module installation and laying of DC cables must be performed by expert personnel. (Danger of electric shock! Danger of arcing! etc.) If there are lightning protection systems already in place, have a specialist company check whether they may be integrated into the system. Also check for changes to lightning protection requirements as a result of the installation.

TIPP

Take photos of roof damage!

!

Clean the roof!

!

Wear gloves during assembly!
Risk of injury from sharp edges!

1. Mounting the module rail

1.1 Calibration

Take the installation plan to hand. Use the installation plan to measure the module field. Observe the distances according to the system statics.

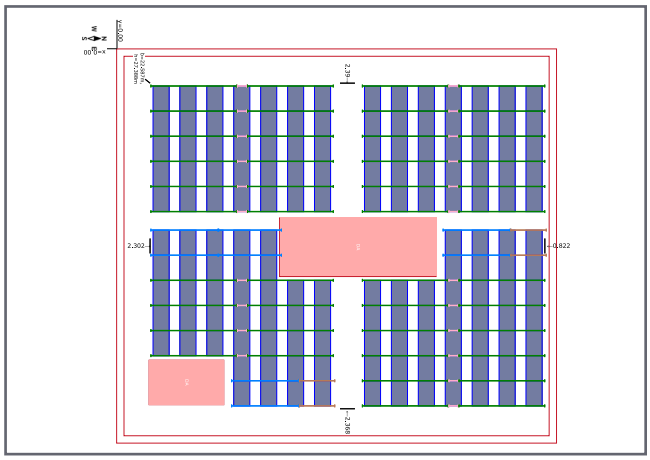

Calibrating the module fields

1.2 Laying building protection mats

Lay out the building protection mats at a distance from the floor rails. The axis dimension is always the module length plus 20 mm for the module center clamp.

In the case of foil roofs (depending on the manufacturer), it must be checked whether fleece-laminated building protection mats are laid out.

Option 1: Lay the building protection mat (minimum thickness 4 mm) in rolls and install along the direction of water flow (roof pitch).

Option 2: Lay building protection mats (minimum thickness 8 mm) to size (length 100 cm) parallel to each other - especially in the module area. This ensures better water drainage when installed across the direction of water flow.

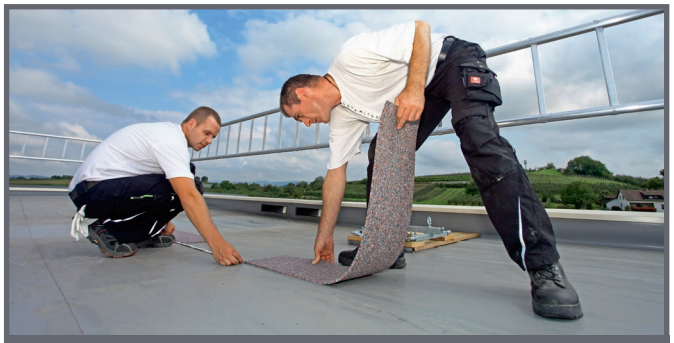
Apply the protection mat

Protection mats (min. 4 mm) in rolls

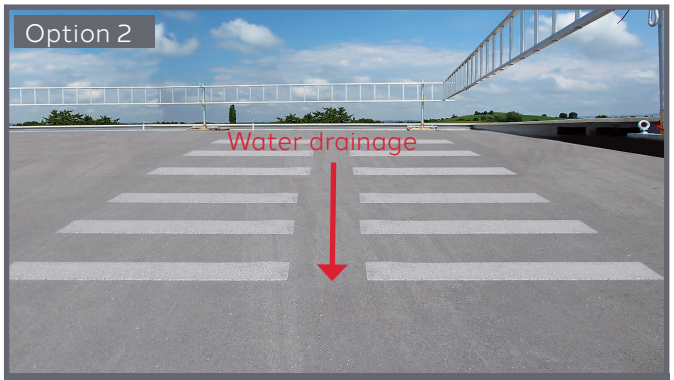

Mats (min. 8 mm) with distance for water drainage.

Apply module rail

1.3 Applying the module rail

Apply the module rail on the protection mat following the installation diagram.

Insert connector in the middle of the rail

1.4 Connecting the module rail

Insert the connector between the module rails.

Fasten the connector

Fasten the connector and the module rail using 8 self-tapping screws (tightening torque reference value indicated by manufacturer 2–3 Nm).

All other rails are arranged according to the design.

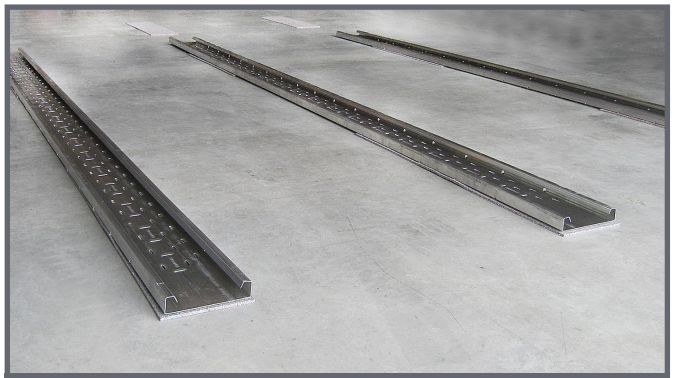
Aligning the rails

1.5 Adjustment and checks

Check the orientation of the module rail according to the installation plans. Check angle and parallelism of the rails.

2. Mounting the supports

2.1 Calibration

Calibrate the position of the supports:

- The front support must be mounted **150 mm** from the front edge of the module rail. (Assembly HSS).

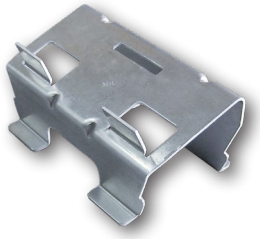

- Measure the upper module supports. . The respective distances can be found from the tables on page 7:

Positioning the supports

2.2 Routing the cables

Note: The module rail also serves as a cable tray. It is recommended to insert the cables before fitting the supports.

Module rail also functions as a cable tray

ECO 10°/ (GE 10°)

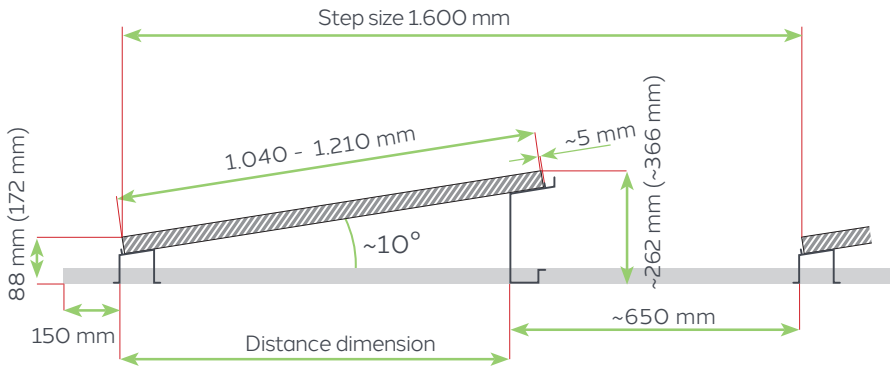

Distances
Front edge to front edge

Module width	Distances
1.040 mm	**951 mm**
1.122 mm	**1.034 mm**
1.134 mm	**1.046 mm**
1.210 mm	**1.123 mm**

Height specifications = module frame 30 mm
Dimensions in (brackets) = GE 10°

ECO 15°/ (GE 15°)

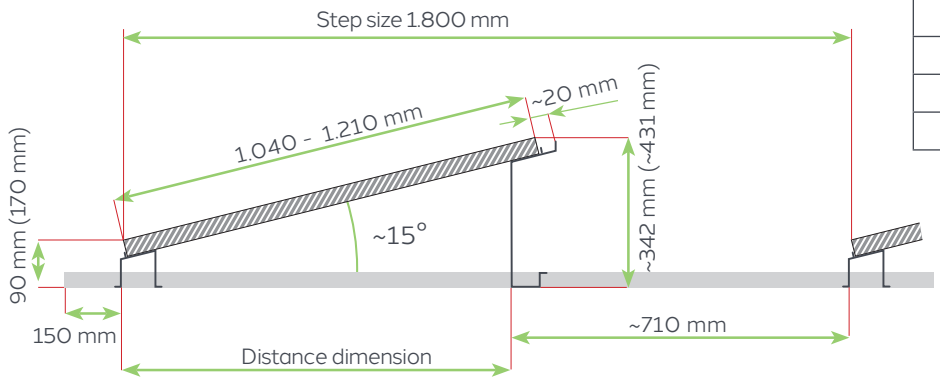

Distances
Front edge to front edge

Module width	Distances
1.040 mm	**9481 mm**
1.122 mm	**1.033 mm**
1.134 mm	**1.045 mm**
1.210 mm	**1.123 mm**

Height specifications = module frame 30 mm
Dimensions in (brackets) = GE 15°

ECO 20°

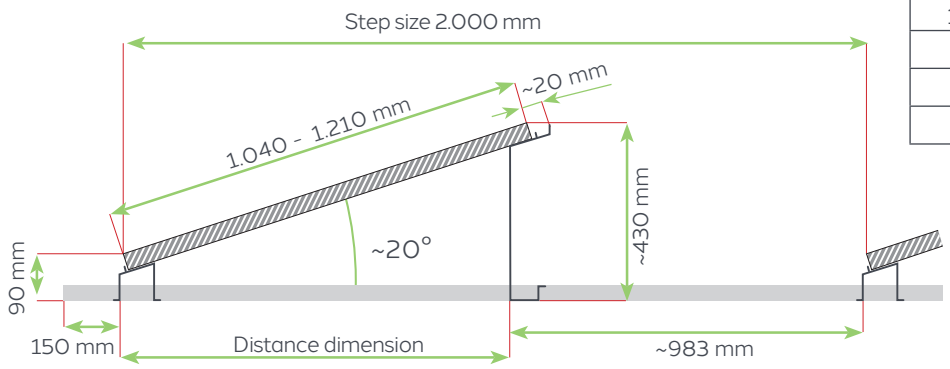

Distances
Front edge to front edge

Module width	Distances
1.040 mm	**913 mm**
1.122 mm	**1.000 mm**
1.134 mm	**1.012 mm**
1.210 mm	**1.092 mm**

Height specifications = module frame 30 mm

2.3 Installing the supports

Insert the lower support into the first row of modules...

Inserting the lower supports

...by simply clicking into place using your foot.

Easy insertion

Insert the upper support into the first row of modules.

Inserting the upper supports

The completed first row installation is used to fasten the rails, determine the distances and avoid further displacement of the rails.

Completed first row

2.4 Ballasting

If you need to apply further weight onto the module rail in accordance with the structural analysis data, you must do so before attaching the modules and wind baffles. Strictly adhere to the values indicated by the structural analysis.

The ballast values provided are mandatory values.

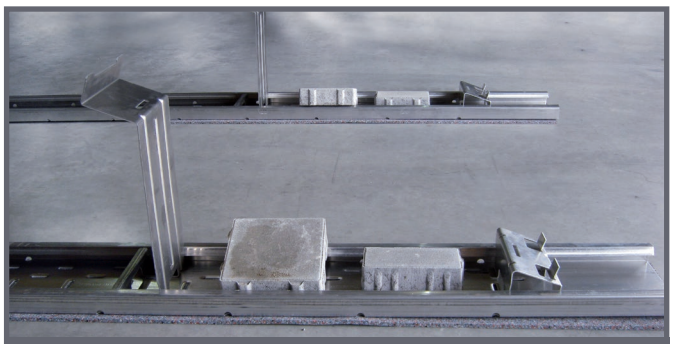
Ballasting

3. Installing the modules

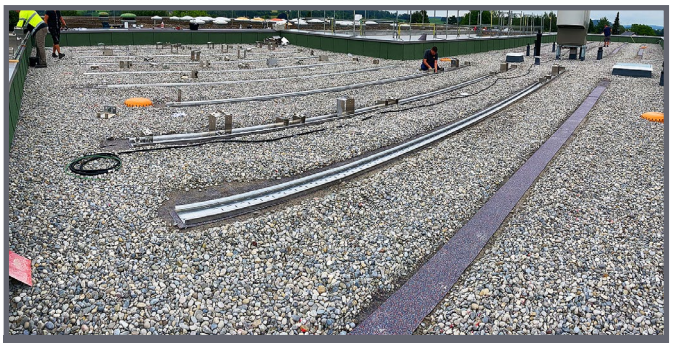
Installation under gravel

3.1 Installation under gravel

Carefully shovel out the strips for the 25 cm wide building protection mats, use a flat shovel, the foil or bitumen layer must not be damaged!
Distance = module length + 20 mm
(center clamp)

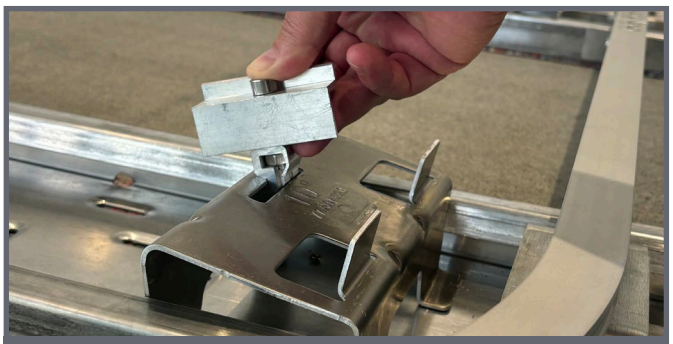
Inserting the module end clamp into the module supports

3.2 Inserting the one-piece end clamp (Duraklick)

On the first row of modules, first insert the module end clamps into the front and rear module support of the side to be started.

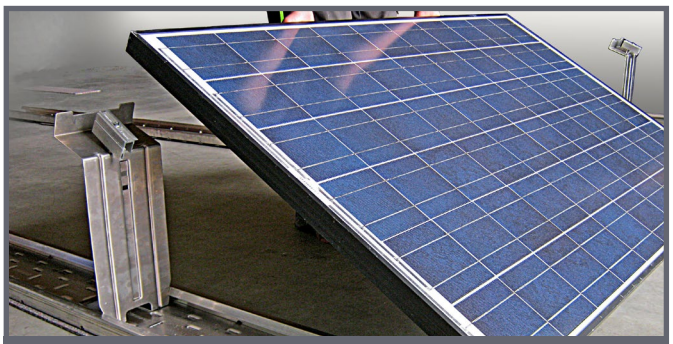
Inserting the modules

3.3 Insert modules

Place the first module on the module supports on the module supports.

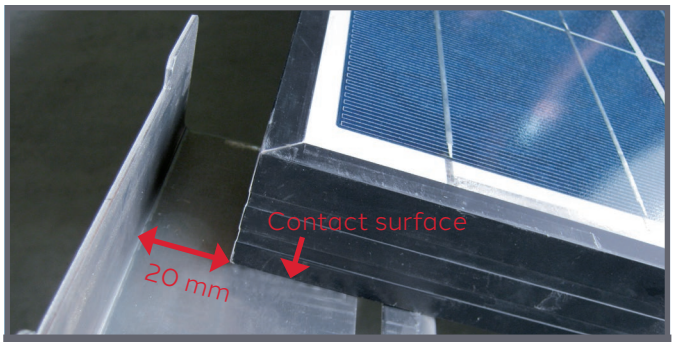

Distance 20 mm from the wind deflector

A distance of approx. 20 mm must be maintained between the module and the wind panel (rear ventilation)!

Ensure that the module frame rests on the entire surface of the module support.

Only required when installing the optional wind plates.

3.4 Inserting the module center terminals

Click the module center clamps into the (front and rear).

Inserting the clamp

Then place the next module.

Insert modules

3.5 Fastening the modules

After mounting the floor rails, the modules are installed. The module center clamps and module end clamps must be tightened. (Tightening torque 10-15 Nm).

Tightening the clamps

Fully assembled first row of modules

3.6 First row of modules Complete assembly

All steps are repeated. The first row of modules should be installed completely to prevent the floor rails from slipping.

Recess for cable routing

3.7 Attaching the cabling

Once the modules have been fully assembled, the modules are wired. The string cables can be laid in the recess in the upper module support and secured with cable ties.

Wind hazard!

If installation is interrupted or stopped, all modules or rows must be fully installed.
ATTENTION: Wind attack! Loose rails must be secured or weighted down!

4. Mounting the wind baffle (optional)

In order to reduce wind loads in the northern area of systems and thus the ballasting, we offer optional wind plates for these areas.

4.1 Attach wind deflectors

Hang the first wind panel behind the right-hand module. Screw it to the floor rail using the self-tapping screws (tightening torque 2-3 Nm).

Fixing the wind deflector

The wind deflectors must also be placed in the recess. Must rest completely.

1. Fit all modules with wind deflectors from right to left until the end of the module row is reached.
2. A gap of approx. 20 mm must be maintained between the module and the wind plate (rear ventilation)!

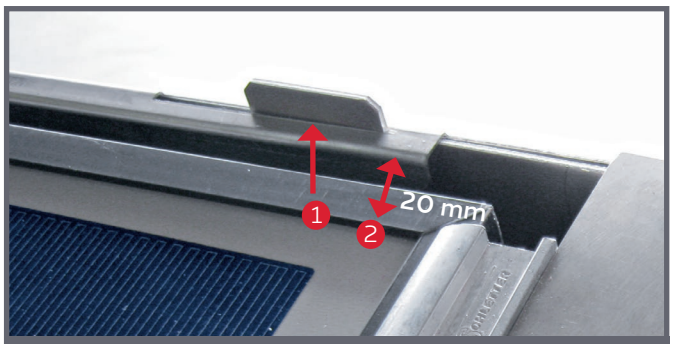

Optimum fit of the wind deflector

4.2 Screw on wind deflectors

Check the correct position of the wind deflectors. Screw together at the holes provided.

Screw the top and bottom wind deflectors together

Fit all modules with wind deflectors from left to right until the right end of the module row is reached.

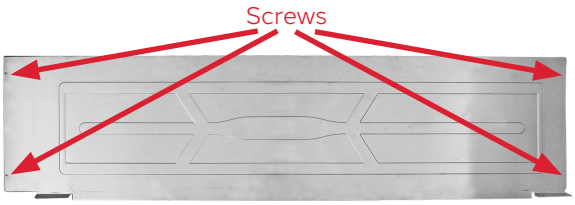

Fixing the wind deflector to the floor rail

Final examination

5. Control

Once all parts have been installed, the entire system must be checked for strength:

- Check the fastening of the module clamps.
- Check the entire construction for stability and strength.
- Check screw and clamp connections

Accessories

For our systems we offer the following accessories:

HSS fall protection system

Horizontal rail system for up to 4 people
DIN EN 795:2012 Type D + E CEN/TS 16415:2013
The certified fall arrest system is a flexible and economical fall protection system that can be Duraklick substructures (including existing ones) can be installed.

For more safety when working on roofs!

The system has been tested by the following testing institute and approved:

DEKRA Testing and Certification GmbH
Dinnendahlstr. 9
44809 Bochum
Zertifikat Nr.: ZPB03522

Exclusion of liability

The manufacturer will not be held liable for the use of the mounting system for purposes other than those intended.

Warranty conditions

The terms provided by law shall apply.

Manufacturer information

The Duraklick PV mounting system South Eco 10° / 15° / 20° & GE 10° / 15° is manufactured by:

SOLTOP Energie GmbH
Lindauer Straße 15
D-88145 Hergatz
www.soltop-energie.eu

ECO 10° / 15° / 20°

Duraklick

soltop energie

Warranty certificate

On all Duraklick mounting systems supplied by us you will receive

10 years durability guarantee on all parts.

If damage occurs during normal use and despite proper installation and handling, we will immediately replace the affected component within the warranty period.

The obligation to provide warranty service does not apply if the damage occurred in connection with exceptional stress (e.g. storm damage, exposure to instability of the substrate, special chemical or biological effects), unless it can be proven that the damage was not caused by this, but was essentially caused by a material or design defect. The installation and handling shall be governed by the technical the technical product descriptions and installation instructions supplied by us for the respective products, the legally prescribed or or generally accepted standards and principles of construction principles of construction as well as, if applicable, the plans, structural analyses and instructions prepared by us individually for the customer shall have priority.

The warranty is limited to the subsequent delivery of defective parts upon notification of the damage within the warranty period. Any statutory warranty or liability claims shall remain unaffected.

Insofar as a possible shorter service life is expressly stated for certain components in general or for a certain type of use, or replacement within a shorter period is provided for within the framework of plans individually drawn up by us, the warranty period shall be limited to this service life or period.

If the damage is covered by an insurance policy against storms and similar events (elementary insurance) or can be can usually be covered, there are no claims.

This warranty only substantiates claims by our contractual partner, through whom all warranty claims are to be processed. Claims may only be asserted by third parties if we agree to this. In all other respects, our General Terms and Conditions shall apply in their currently valid version.

For more information, please visit www.soltop-energie.ch & www.soltop-energie.eu

SOLTOP Energie AG
St. Gallerstrasse 3
CH-8353 Elgg
info@soltop-energie.ch

SOLTOP Energie GmbH
Lindauer Straße 15
D-88145 Hergatz
info@soltop-energie.eu

SOLTOP Energie SA
Rue des Sablons 8
CH-3960 Sierre
info.fr@soltop-energie.ch

SOLTOP Energie SA
Avenue Haldimand 41
CH-1400 Yverdon-les-Bains
info@soltop-energie.ch

Deutsches Institut für Bautechnik DIBt

Eine vom Bund und den Ländern gemeinsam getragene Anstalt des öffentlichen Rechts

Zulassungs- und Genehmigungsstelle für Bauprodukte und Bauarten

Allgemeine bauaufsichtliche Zulassung / Allgemeine Bauartgenehmigung

Datum: 24.09.2025
Geschäftszeichen: I 85-1.14.4-113/24

Nummer:
Z-14.4-691

Geltungsdauer
vom: **24. September 2025**
bis: **24. September 2030**

Antragsteller:
SOLTOP Energie GmbH
Lindauer Straße 15
88145 Hergatz

Gegenstand dieses Bescheides:
Flachdach-Montagesystem "Duraklick"

Der oben genannte Regelungsgegenstand wird hiermit allgemein bauaufsichtlich zugelassen/genehmigt.
Dieser Bescheid umfasst neun Seiten und drei Anlagen mit 25 Seiten.
Der Gegenstand ist erstmals am 10. März 2014 allgemein bauaufsichtlich zugelassen worden.

DIBt

DIBt | Kolonnenstraße 30 B | D-10829 Berlin | Tel.: +49 30 78730-0 | Fax: +49 30 78730-320 | E-Mail: dibt@dibt.de | www.dibt.de

Notes

Montagesystem Süd
Eco 10° / 15° / 20°
GE 10° / 15°
Assembly instruction

© SOLTOP Energie GmbH • Montageanleitung ECO / GE dt. • Printed in Germany 07/2025 • Änderungen vorbehalten!

For more information, please visit www.soltop-energie.ch & www.soltop-energie.eu

SOLTOP Energie AG
St. Gallerstrasse 3
CH-8353 Elgg
info@soltop-energie.ch

SOLTOP Energie GmbH
Lindauer Straße 15
D-88145 Hergatz
info@soltop-energie.eu

SOLTOP Energie SA
Rue des Sablons 8
CH-3960 Sierre
info.fr@soltop-energie.ch

SOLTOP Energie SA
Avenue Haldimand 41
CH-1400 Yverdon-les-Bains
info@soltop-energie.ch